Congreso AAPA

Desarrollo Sostenible en Puertos de América Latina y el Caribe

COMPANY PROFILE – KEY FACTS

- 3 Main Activities
  - Dredging and Marine Works
  - Civil Engineering Works
  - Environmental Activities
- Ultramodern fleet
- More than 5,000 Employees
- Yearly turnover of 2.1 billion €

ACTIVITIES

- Dredging Activities
- Civil Engineering
- Environmental Projects
- Offshore Services
- Rock Revetment Works
- Heavy Lift Projects

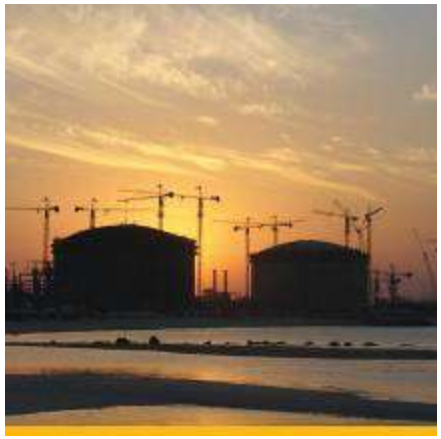

DREDGING ACTIVITIES

- Capital Dredging
- Maintenance Dredging
- Reclamation Dredging
- Port Infrastructure Works

EQUIPMENT

EXISTING FLEET

- 26 Trailing Suction Hopper Dredgers
- 14 Cutter Suction Dredgers
- 5 Backhoe Dredgers
- 20 Split Hopper Barges
- 2 Side Stone Dumping Vessel
- 2 Fall Pipe and Mining Vessel

PANAMA CANAL EXPANSION PROGRAM

- 2007 - 2014
  - **DEEPENING of GAILLARD CUT**
  - **DRY EXCAVATION:** Pacific Access Channel: PAC1 – PAC2 – PAC3 – PAC4 – total volume 49 million m^3
  - **DREDGING:** Pacific Entrance – Atlantic Entrance – Gatun Lake Dredging – Approach to 3rd set of Locks
  - **CONSTRUCTION OF 3rd SET OF LOCKS:** Pacific and Atlantic Side

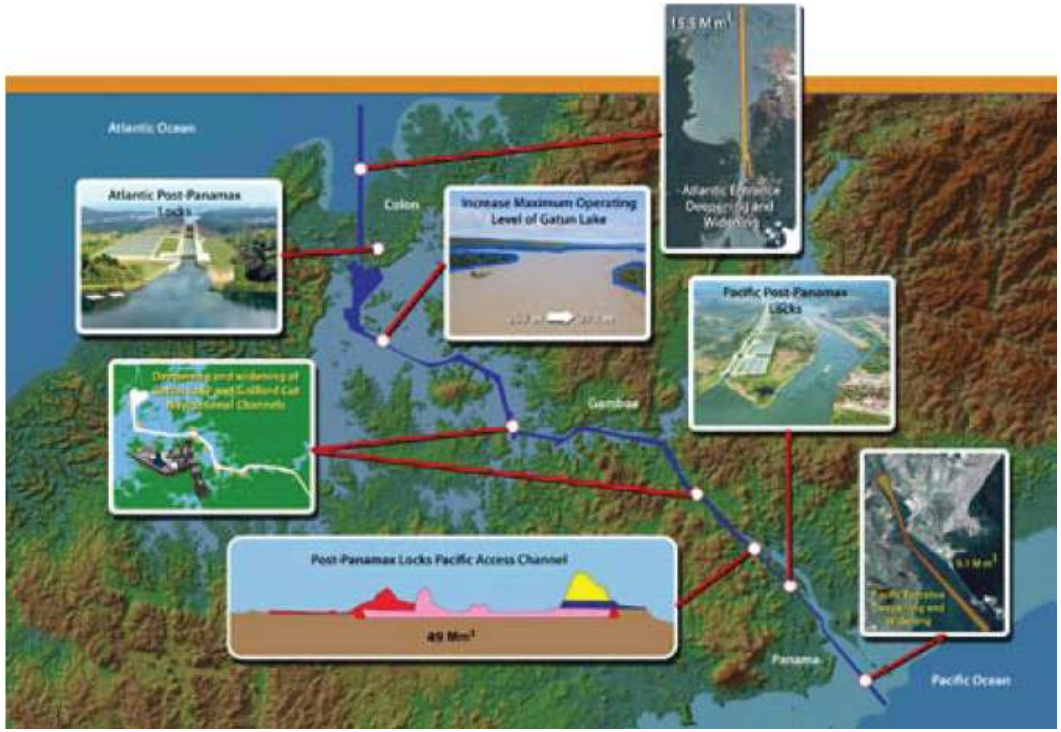

DREDGING FLEET

- BHD Il Principe – Liebherr 995
  - Short configuration – 22.4m^3 bucket
- CSD Hondius
  - Stationary cutter dredge
- CSD Marco Polo
  - Self-propelled
  - 225m in 2 cuts
- TSHD De Bougainville – 3,700m^3
  - Draught loaded 5.85m
- TSHD Filippo Brunelleschi – 11,300m^3
  - Draught loaded 9.10m
- BHD Vitruvius
- SHB
  - Magellano / Verrazano
  - Concepcion, La Boudeuse
- Barges
  - DN117 & DN118
- Survey launch
  - DN56
  - All The Way
- Crew Launch
  - DN80
  - Obelix

Widening and Deepening of the Atlantic entrance of the Panama Canal - Panama I 2004-2005

Dredging: 2,350,000 m^3

Reclamation: 1,750,000 m^3 dumped, 600,000 m^3 reclaimed

JAN DE NUL INVOLVEMENT

- **April 2007 – April 2010**
  - **CHARTER of Backhoe Dredge "Il Principe" and 2 barges for**
    - **Drilling & Blasting – ACP**
    - **Removal of blasted material: ACP – JDN**
    - **Equipment:**
      - **BHD "Il Principe" – Liebherr 995 + Barges**
      - **Rialto Christensen + Barges**

JAN DE NUL INVOLVEMENT

- **July 2009 - 2014**
  - **DESIGN & CONSTRUCTION OF THIRD SET OF LOCKS.**
  - **Consortium Grupo Unidos por el Canal (GUPC): SACYR (Sp), IMPREGILO (It), CUSA (Pan) and JDN Group**
  - **3.2 billion USD**

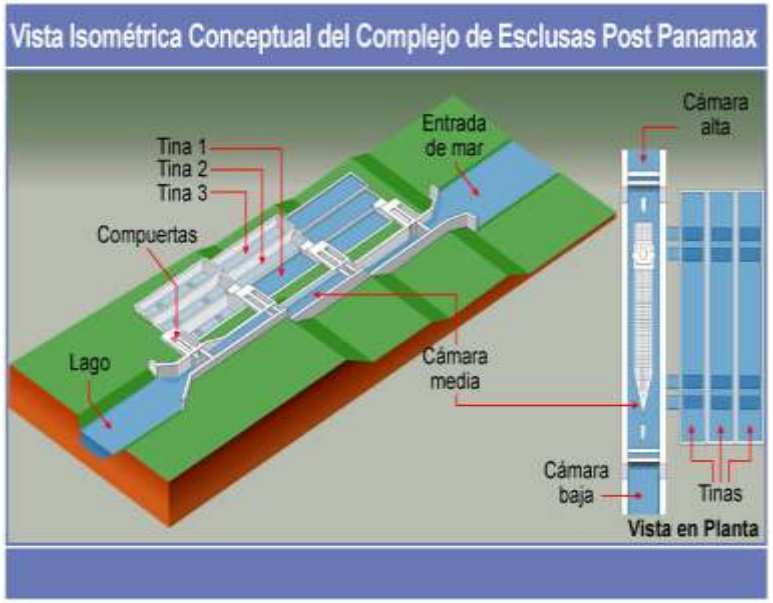

PROFILE OF THE THIRD SET OF LOCKS

JAN DE NUL INVOLVEMENT

- **September 2009 – 2013**
  - **WIDENING & DEEPENING OF THE ATLANTIC ENTRANCE and NORTH APPROACH CHANNEL to the THIRD SET OF LOCKS *(ATLANTIC DREDGING)***
  - **ADVANTAGE JDN**
    - **Experience 2004-2005**
    - **JDN presence in Central and South America**
    - **Flexible fleet: Different soils ask for various types of equipment**
  - **Base scope (-15.5m MLW) : 89.6 million USD**
  - **Extended scope (-16.1m MLW): 106 million USD**
  - **Total Volume to dredge: 17.2 million m^3**

Jan De Nul GROUP

SEQUENCE ATLANTIC DREDGING

- **WILD LIFE RESCUE – ANIMAL RELOCATION**
  - Observation
  - Setting out traps
  - Catching Wild Life (iguana, armadillo, sloth, monkey,…)
  - Relocation in National Park

SOCIO - ENVIRONMENTAL ASPECTS

- EIA for Expansion Program
- ACP inspections (Autoridad del Canal de Panama)
- ANAM inspections (Autoridad National del Ambiente)
  - Community Relation Officer
  - Reporting Archaeological Findings
  - Wildlife rescue & Relocation
  - Water and Sediment Quality Control
  - Air Quality, Noise & Vibration Control
  - Erosion Control (hydro seeding / sediment control barriers)
  - Sedimentation control in in-land disposal areas
  - Hydro Dynamic Modelling (current & sediment transport) on disposal area

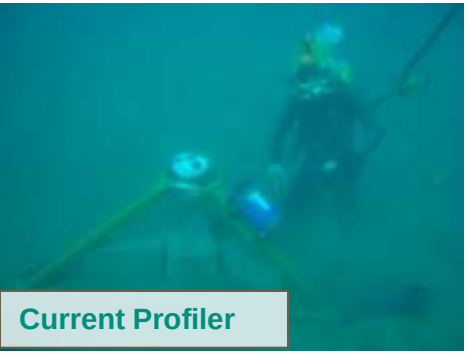

Current Profiler

Silt Curtain

Multi - Probe

Siltation Ponds
Disposal Site

Recent and Current Regional Activities

- Argentina: Hidrovia, Escobar LNG, La Plata, Bahia Blanca, Quequen
- Chile: Arica, Antofagasta, Lirquen
- Peru: Obras Comunes, Salaverry, Muelle Sur, Melchorita, Shougang
- Colombia: Buenaventura Channel, TC Buen, Cartagena, Puerto Nuevo, Tumaco
- Panama: Atlantic, Penac, Gupc, PPC Cristobal
- El Salvador: La Union
- Honduras: Pto Cortez
- Nicaragua: Corinto
- Mexico: Veracruz, Tampico, Manzanillo, Ensenada
- Brazil: Rio Grande do Sul, Itajai, Embraport, Sepetiba
- Uruguay: TCP, Montevideo Channel

CALLAO CONTAINER TERMINAL

TECHNICAL SPECIFICATIONS	Equipment	Trailing Suction Hopper Dredgers: James Cook, De Bougainville Cutter Suction Dredger: Hondius Split Hopper Barges: Le Sphinx, L'Etoile DN 28 + DN 73
	Scope	Dredging, demolition, wreck removal
	Soil	Silt, sand, Lima gravel
	Volume	Dredging: approx. 1,988,374 m³
	Dredging depth	Access Channel and Turning Basin: 14.0 m CCT area: till grava Lima level

The content of this document is provided strictly for information purposes only. Whilst it has been endeavoured to ensure completeness and accuracy, no warranty - express or implied - is given, in particular of fitness for a particular purpose. In no event any Jan De Nul Group company will be liable for any whatsoever damages arising directly or indirectly from the use of or reliance on the content provided herein, even if (previous) advice has been given/received that such damages may occur.

CALLAO CONTAINER TERMINAL

PROJECT DESCRIPTION	Dredging of soft material and reclaiming of the new container terminal + building of 650 m quay wall Demolition of quay 8 and 9 Wreck removal in Port Callao
CLIENT'S NAME	Dubai Port World Callao
CONTRACT VALUE (partly lump sum, partly unit rate)	45,480,000 USD
PERIOD	04.04.2008 - 04.07.2010

CALLAO CONTAINER TERMINAL

PORT INFRASTRUCTURE WORKS

DP World Container Terminal - Callao

Callao Terminal - Peru I 2008-2010

Dredging: approx. 4,000,000 m³, Reclamation: approx. 2,000,000 m³

Callao Container Terminal

- DP World Callao:Demolition & Dredging
  - Access Channel
  - Turning Basin

NOW

BEFORE

Callao Container Terminal

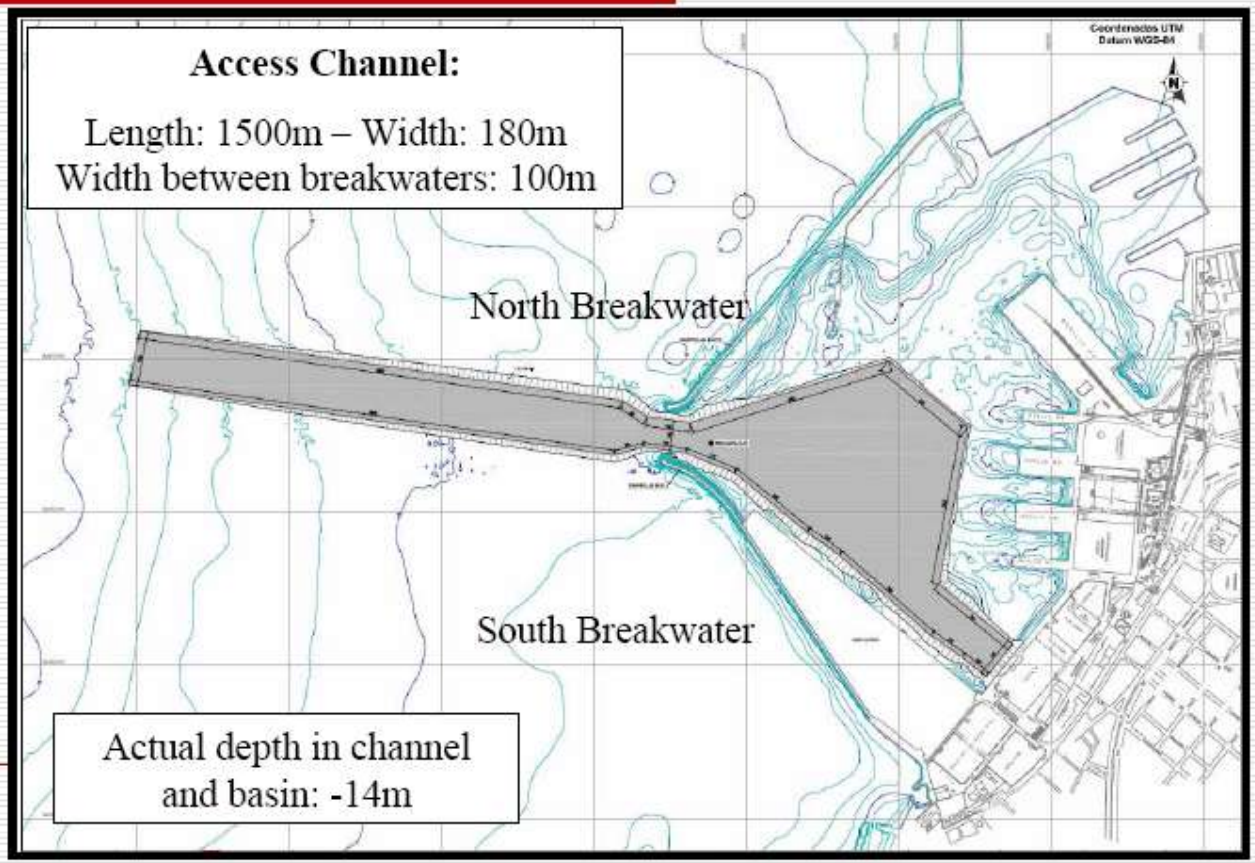

Obras Comunes

"Obras Comunes"

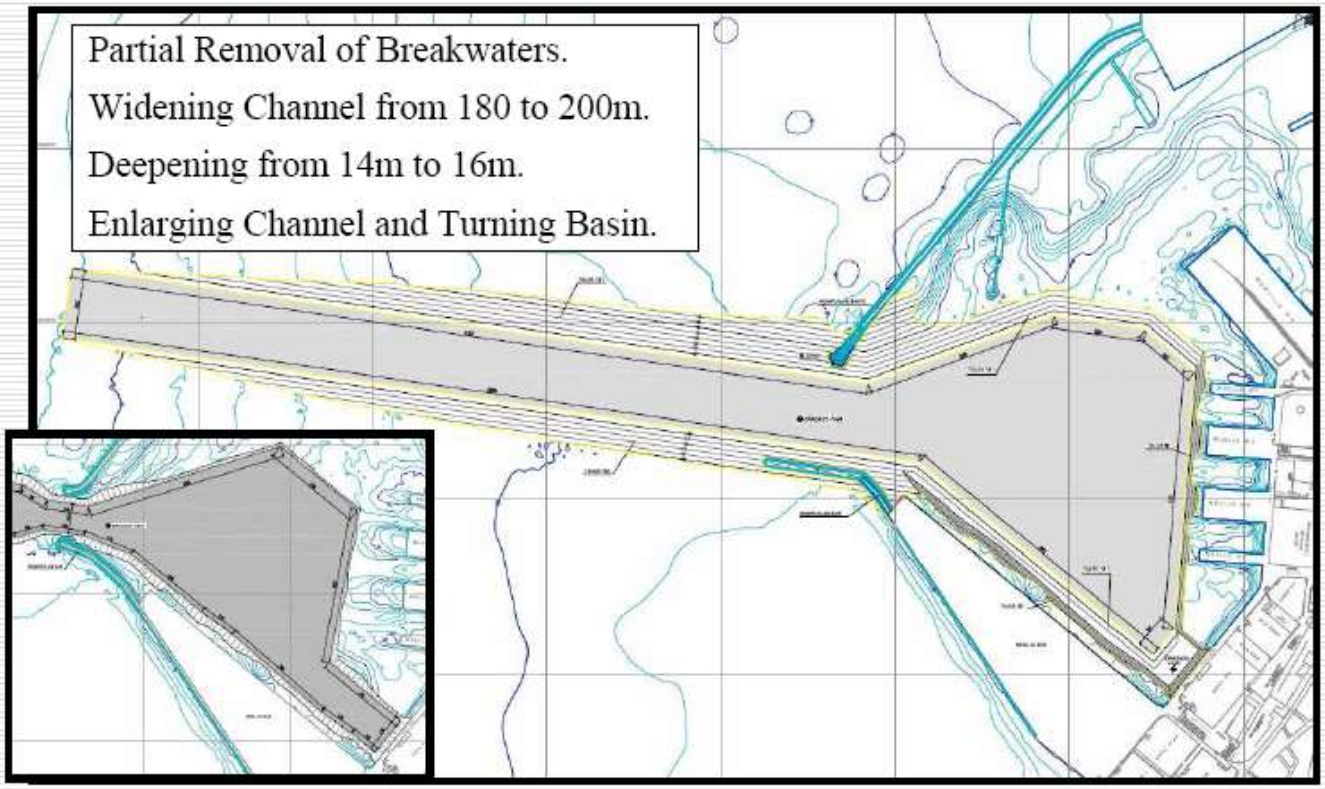

CALLAO OBRAS COMUNES

OBRAS COMUNES:

IMPROVEMENT AND EXTENSION OF THE ACCESS TO THE PORT TERMINAL OF CALLAO.

Callao Port

Obras Comunes

Increasing the width of the Access Channel between the breakwaters from 100m to 200m.

- Partial demolition of North Breakwater.
- Partial demolition of South Breakwater.
- Construction of New Segment of South Breakwater

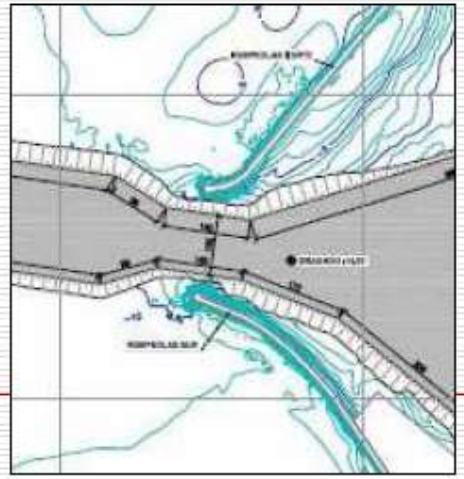

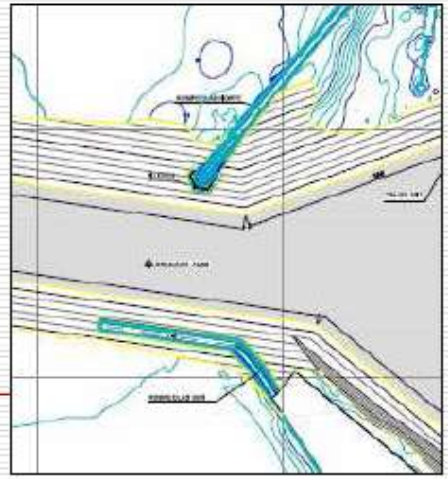

Obras Comunes

Dredging:

- Access Channel
- Turning Basin
- South Breakwater Base.
- Both Breakwaters contours.

Partial Demolition of North Breakwater.

- Rock removal for piles installation.
- Piles installation.
- Rock removal.
- Rock relocation to New South Breakwater.

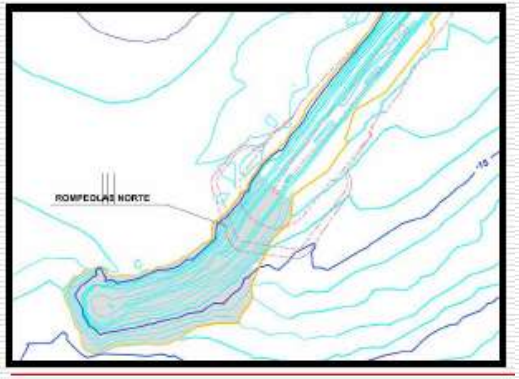

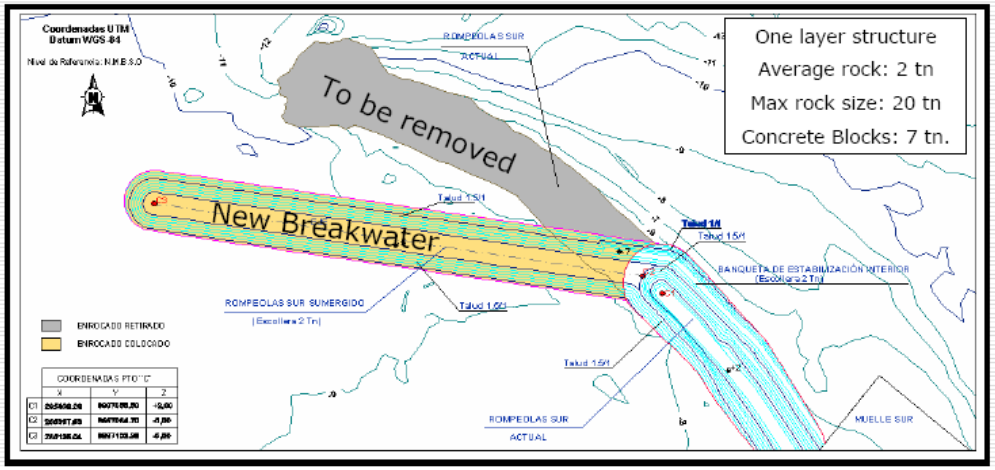

Obras Comunes

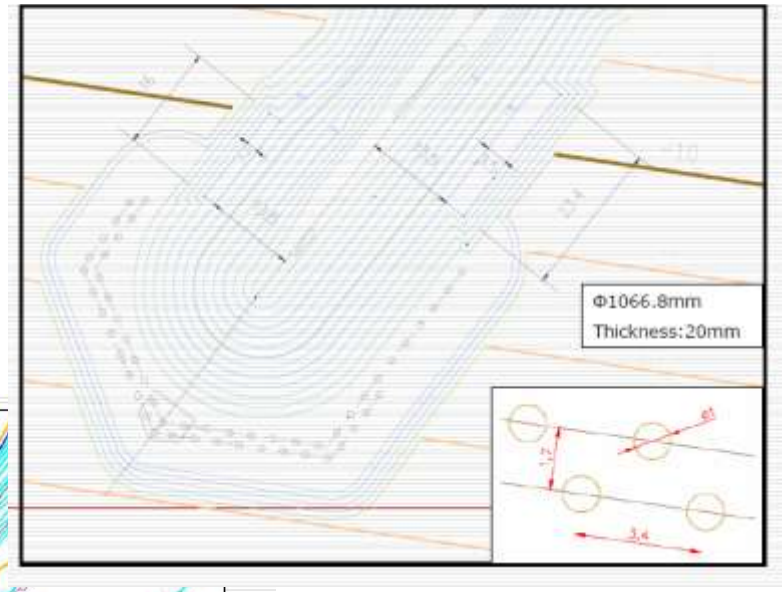

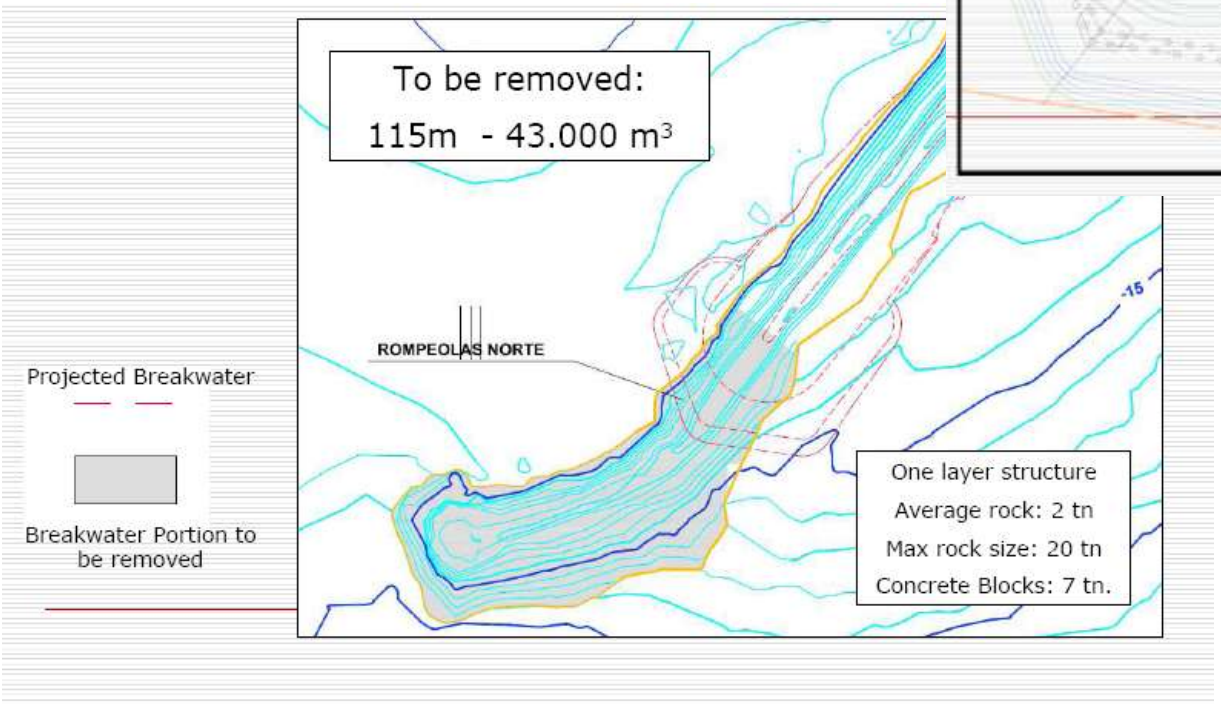

Obras Comunes

Equipment

TSHD: Filippo Brunelleschi

TSHD: De Bougainville

SHB: Verrazzano

BHD: Vitruvius

Environmental considerations become more and more important throughout the world.

As an environmentally conscious international company, a major policy of JDN Group is translated in a continuous strive to develop more efficiënt and environment friendlier dredging techniques.

Trailing hopper dredge :

- low turbidity valve
- green pipe

Stationary dredge :

- low turbidity dredge head

Multi - Functional Trailing Suction Hopper Dredge

Features following dredging techniques :

- **Standard dredging without overflow**
- **Standard dredging with overflow**
- **Low Turbidity Valve in overflow funnel**
- **Environmental dredging with ‘Green Pipe’**

Environmental Sustainability

- Turbidity valves in dredgers

Low Turbidity Valve

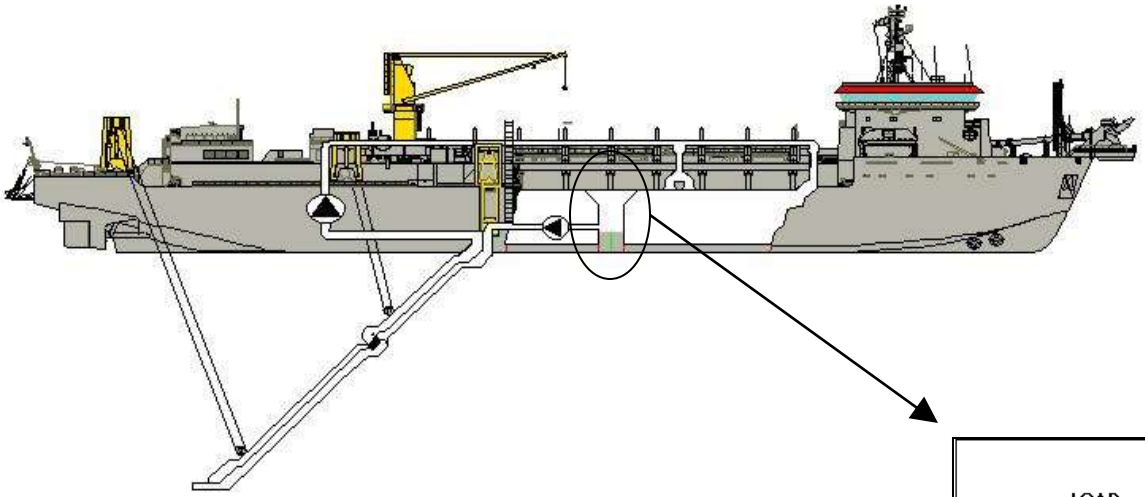

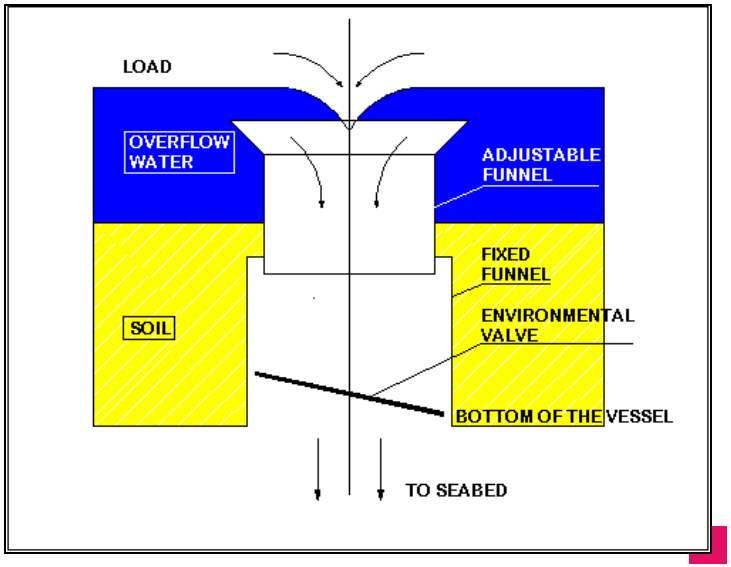

An adjustable valve in the overflow funnel chokes the flow in such a way that no air is taken down with the suspension leaving the hopper.

‘Green Pipe’

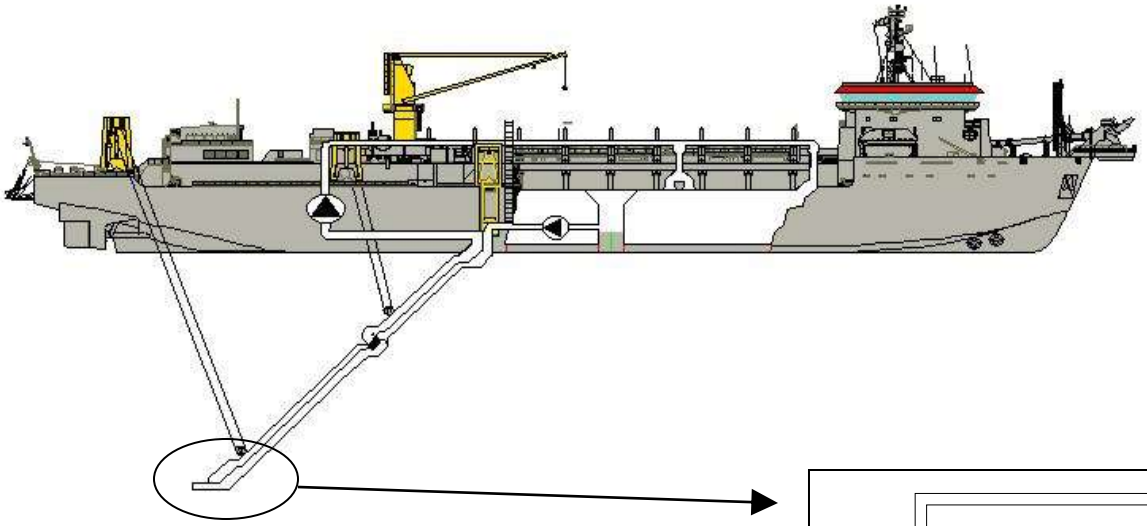

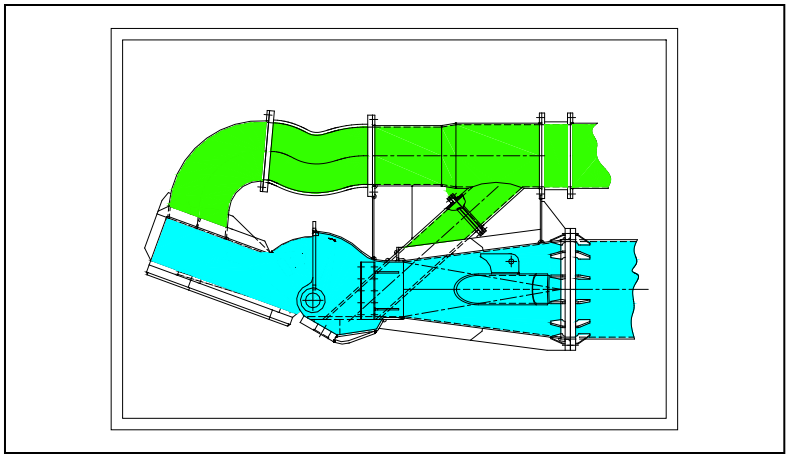

The overflow suspension is pumped trough an additional pipe, mounted on top of the suction pipe, back to the suction head where it is used as process water.

Activating the ‘Green Pipe’

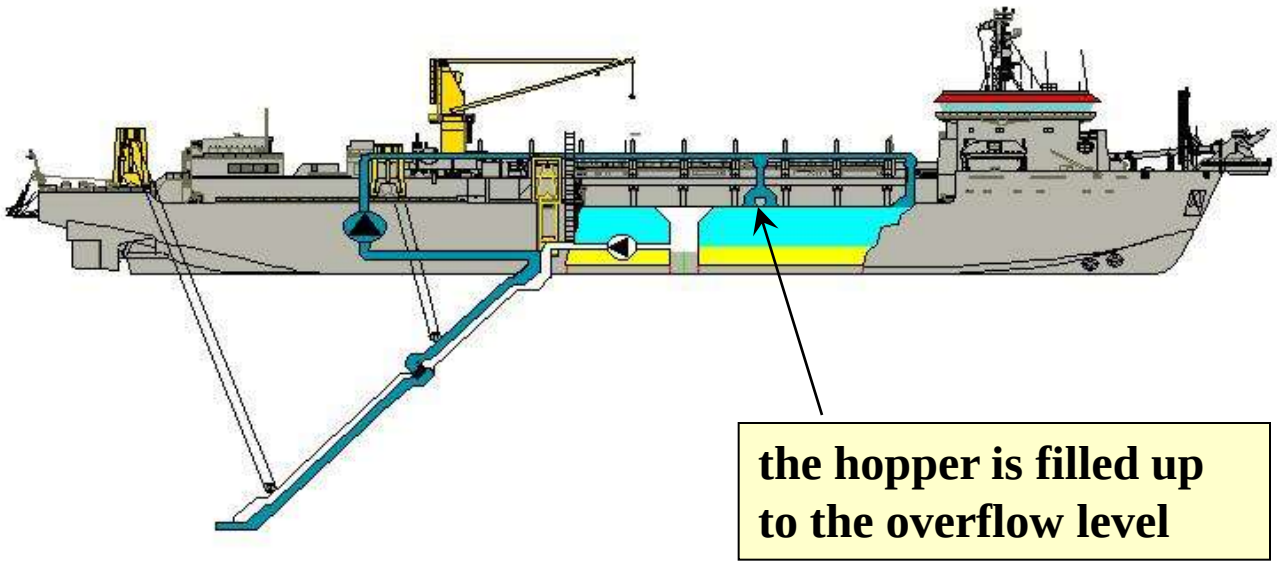

Activating the ‘Green Pipe’

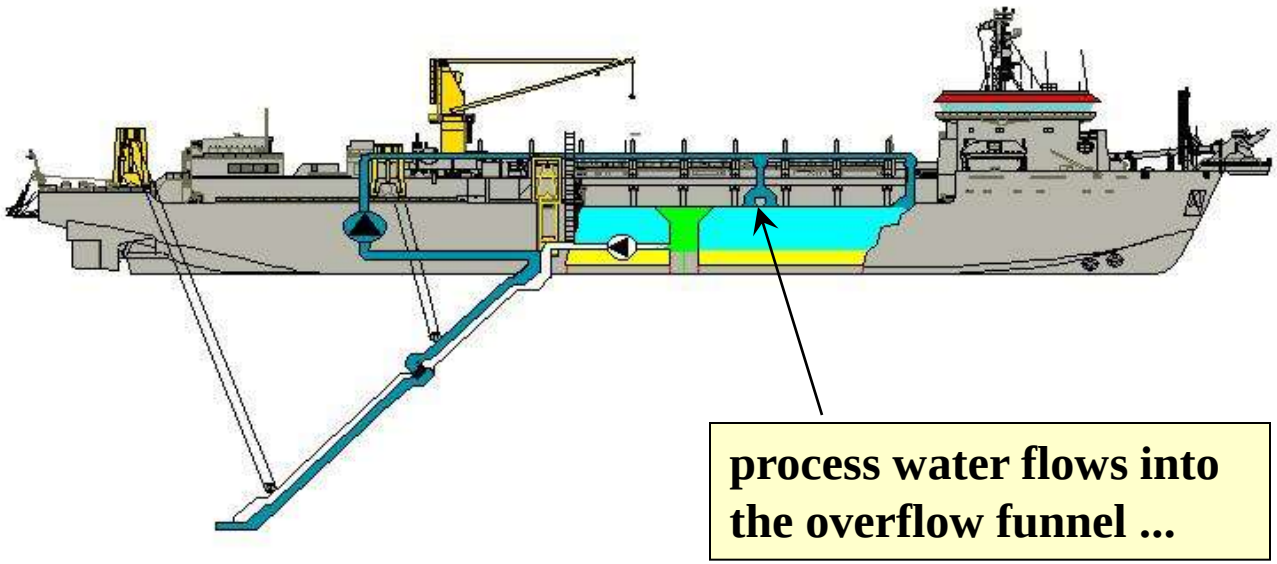

Activating the ‘Green Pipe’

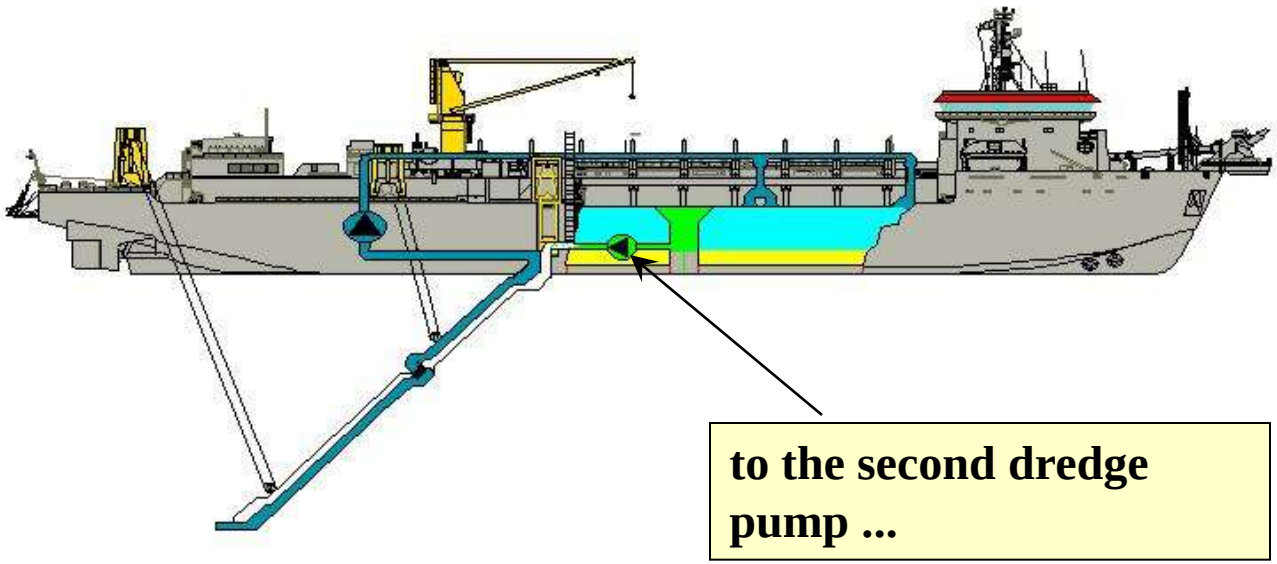

Activating the ‘Green Pipe’

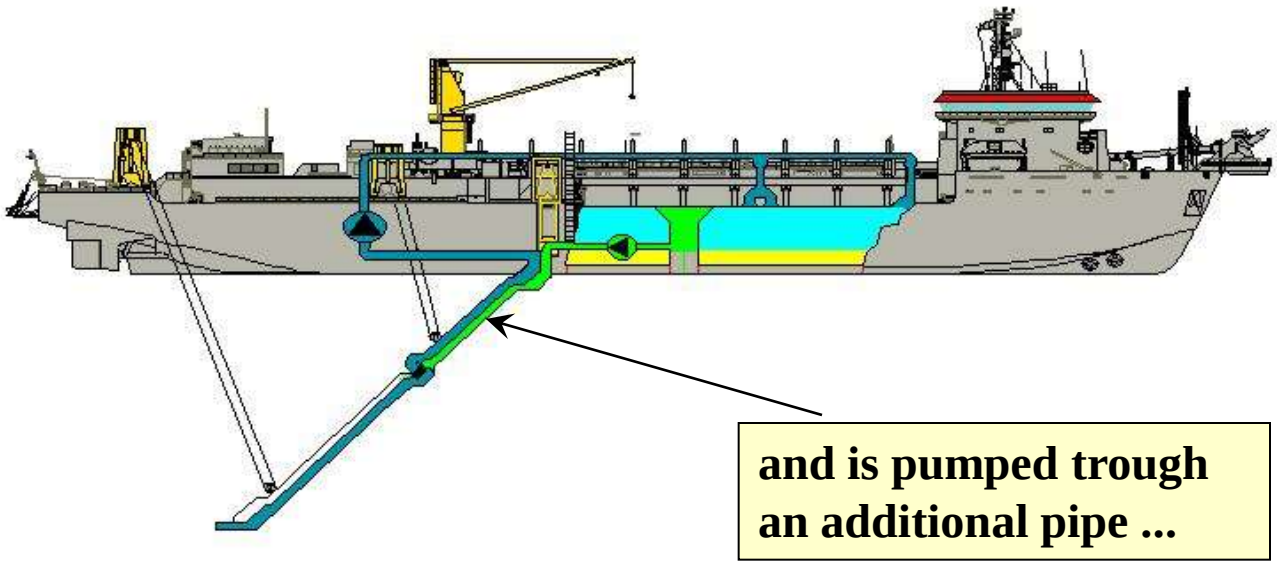

Activating the ‘Green Pipe’

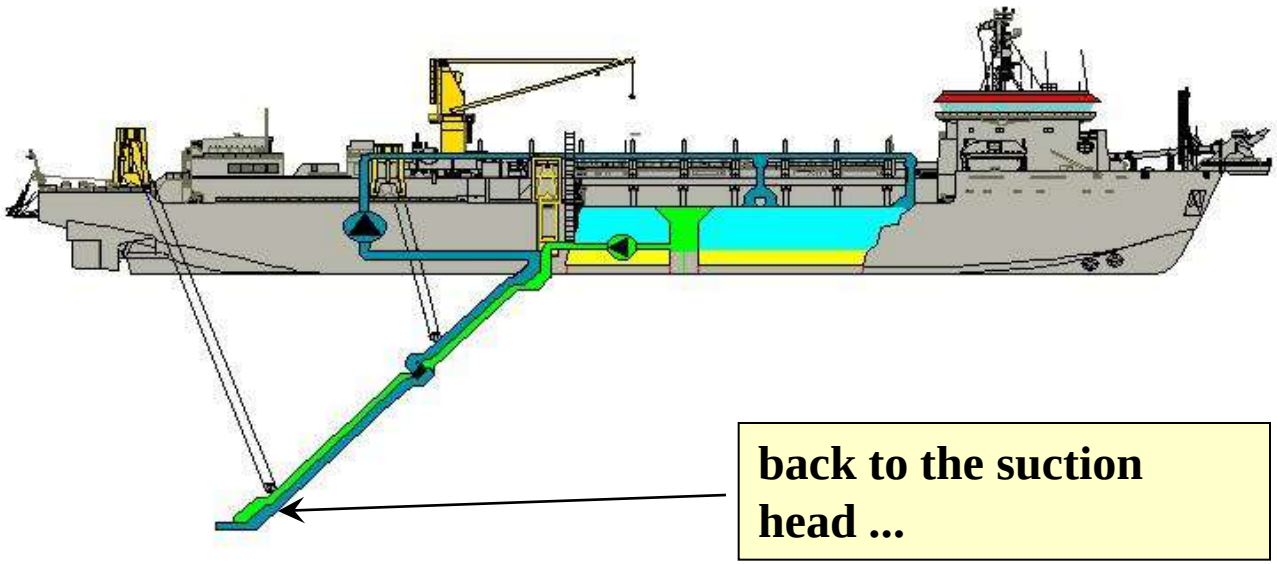

Activating the ‘Green Pipe’

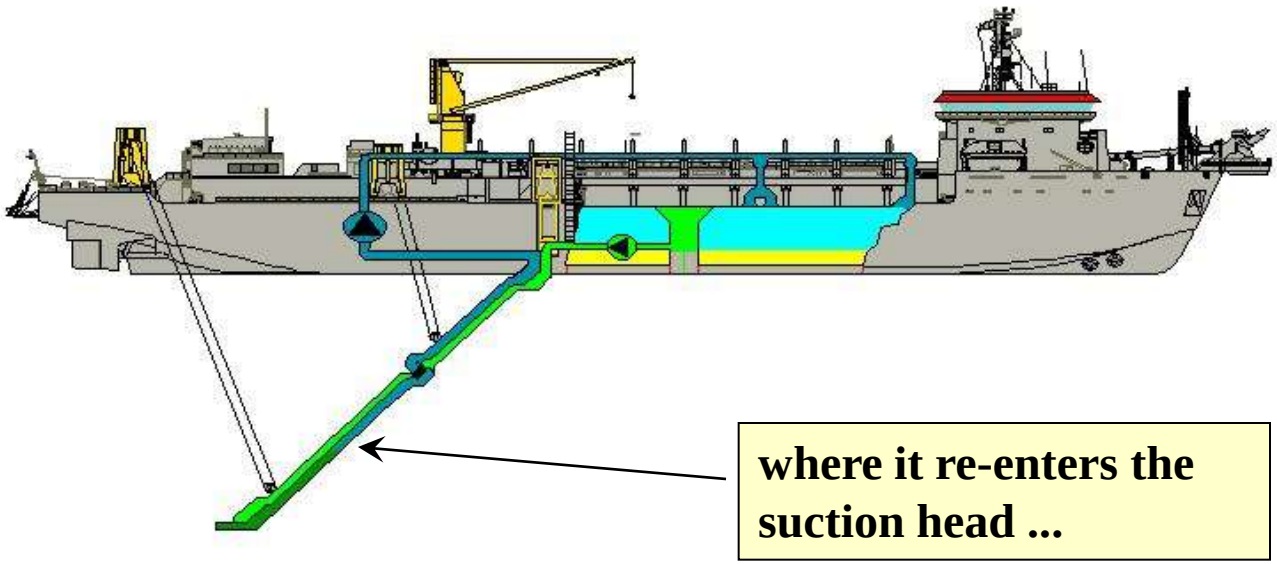

Activating the ‘Green Pipe’

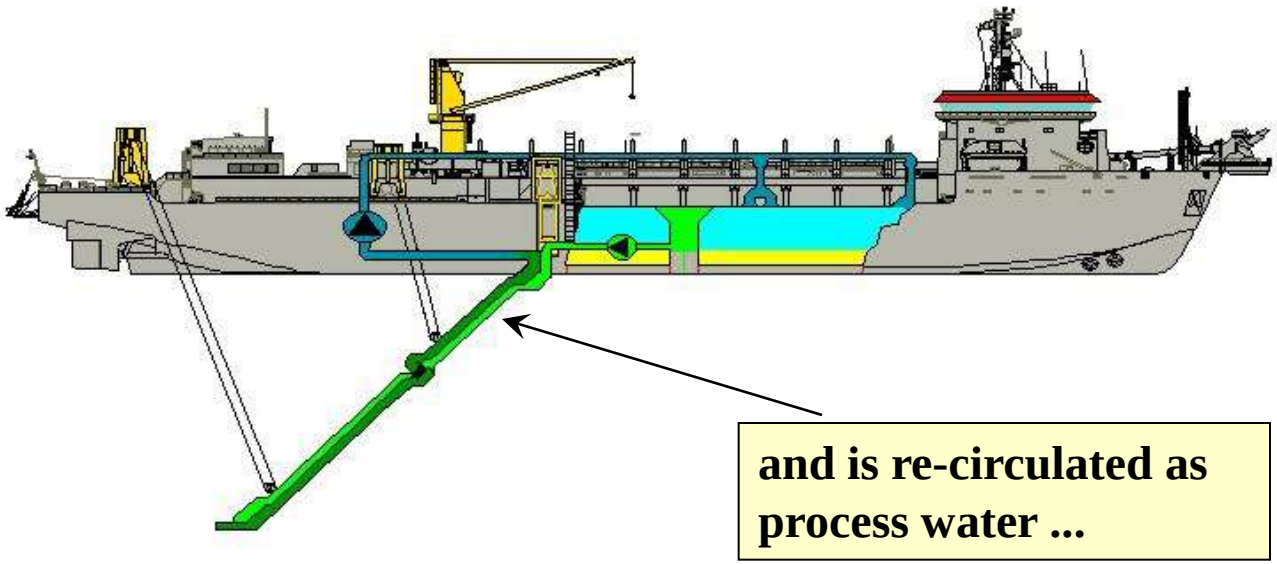

Activating the ‘Green Pipe’

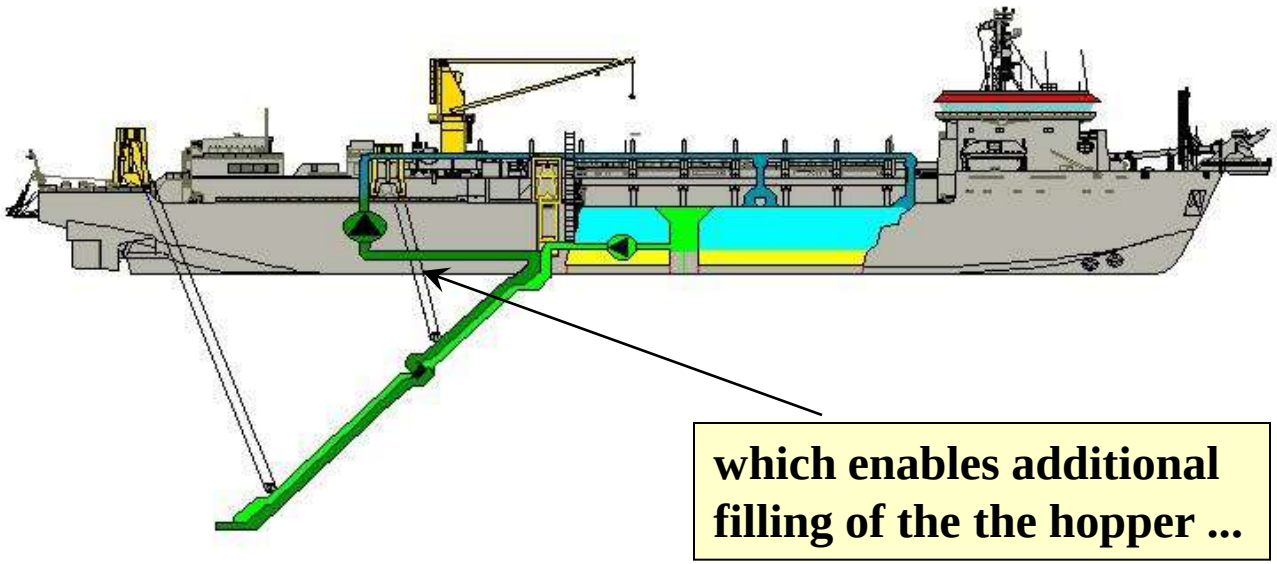

Activating the ‘Green Pipe’

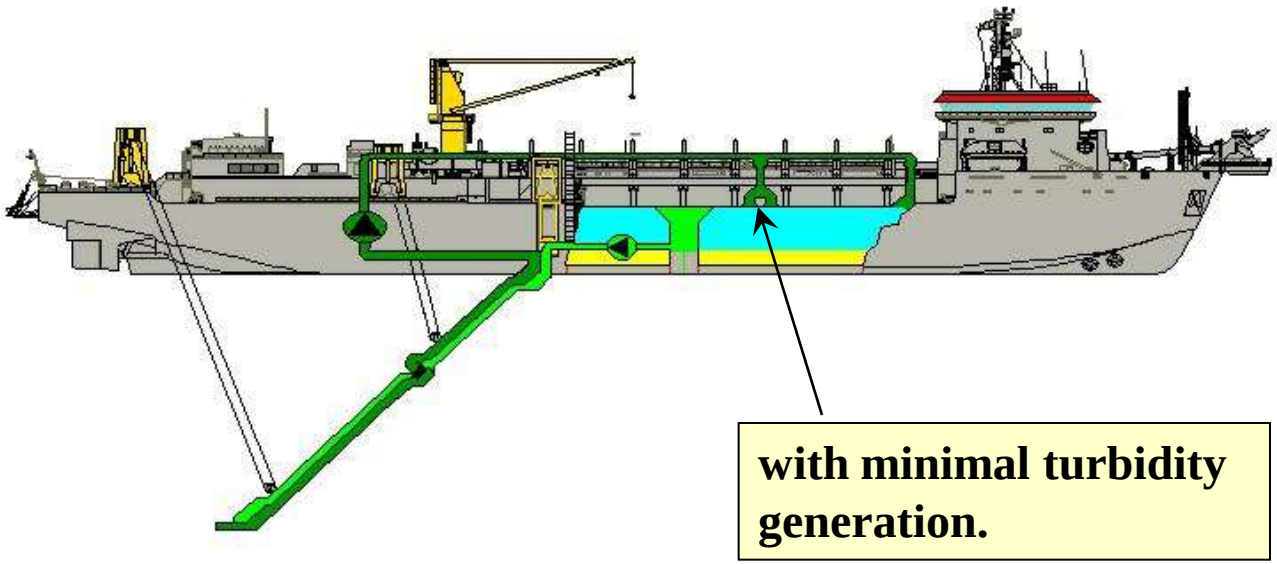

Turbidity plume generated during dredging operations with TSHD

Compared dredging techniques :

- **Standard dredging without overflow**
- **Standard dredging with overflow**
- **Low Turbidity Valve in overflow funnel**
- **Environmental dredging with ‘Green Pipe’**

The dredging process : - commencing from an empty hopper

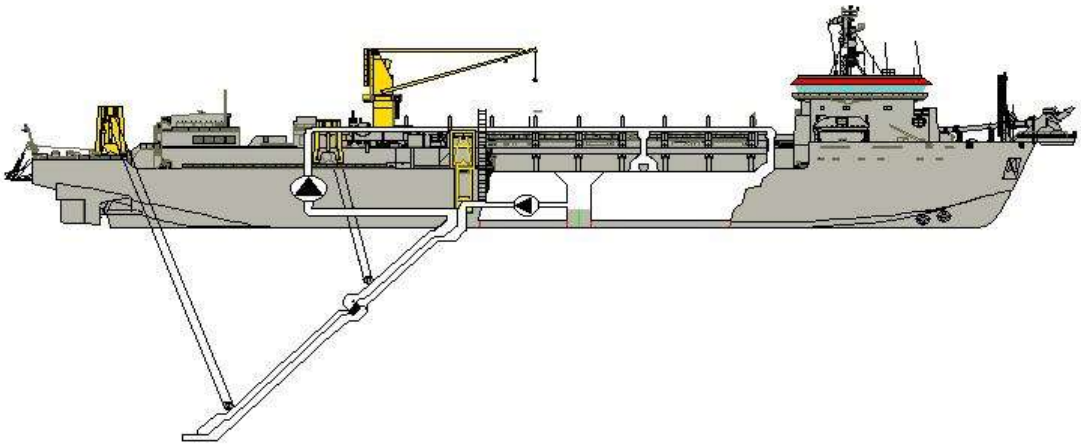

- dredged material is pumped into the hopper

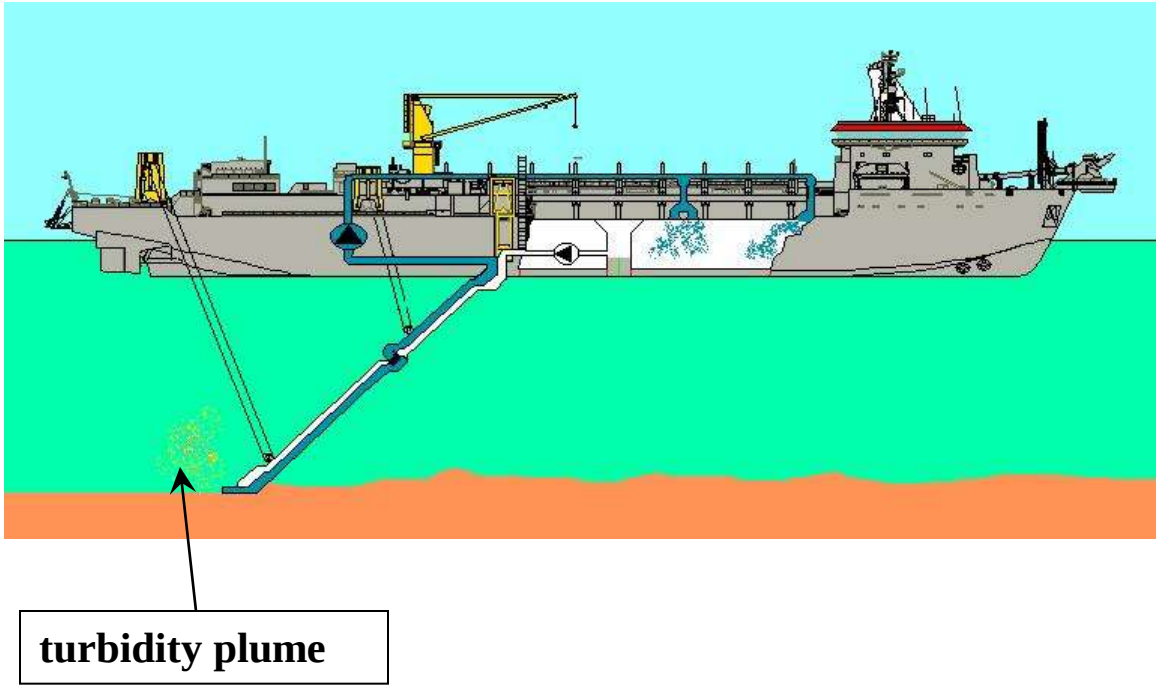

- filling the hopper (loading <u>without overflow</u>)

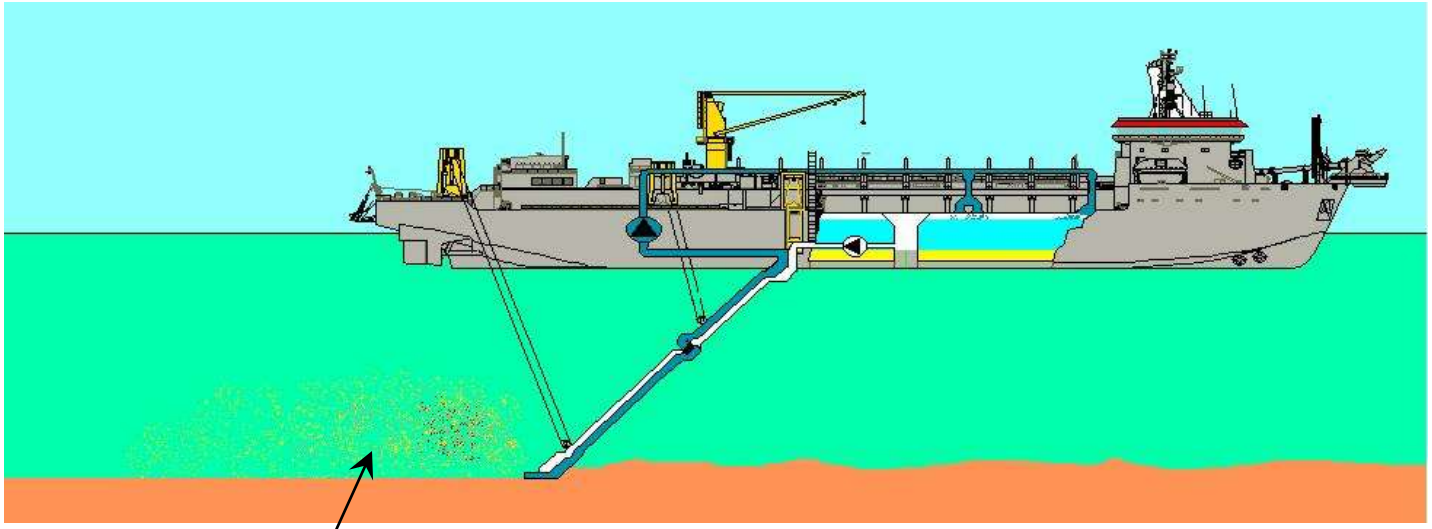

turbidity plume

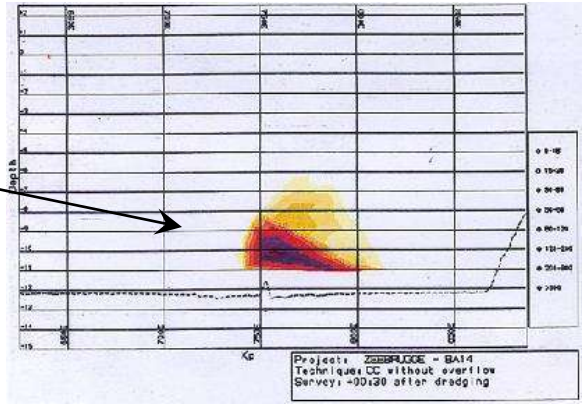

- additional loading with <u>standard overflow</u>

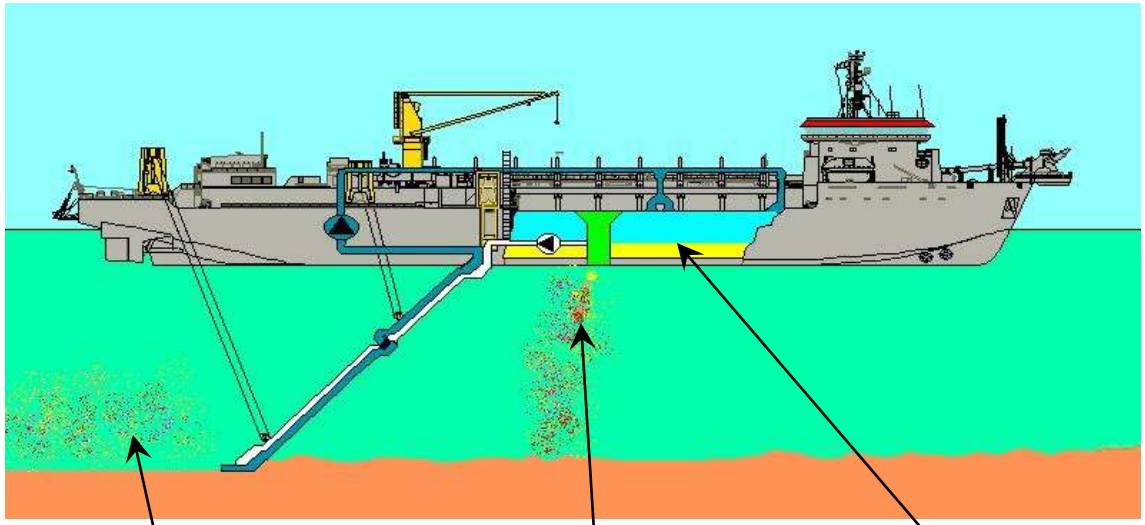

- plume generation while loading with <u>standard overflow</u>

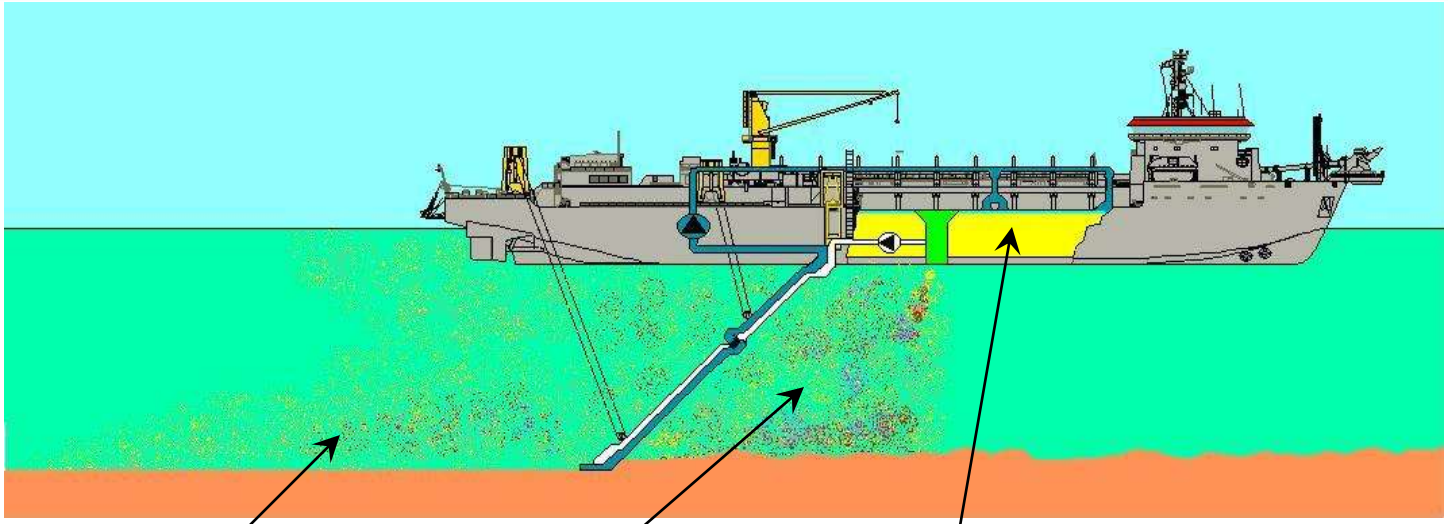

turbidity plume dredge head

turbidity plume overflow

continue loading

New parameters :
- upward airstream
- propeller impact

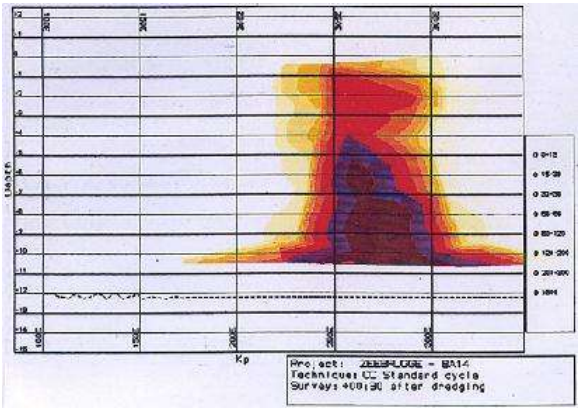

- additional loading with low turbidity valve

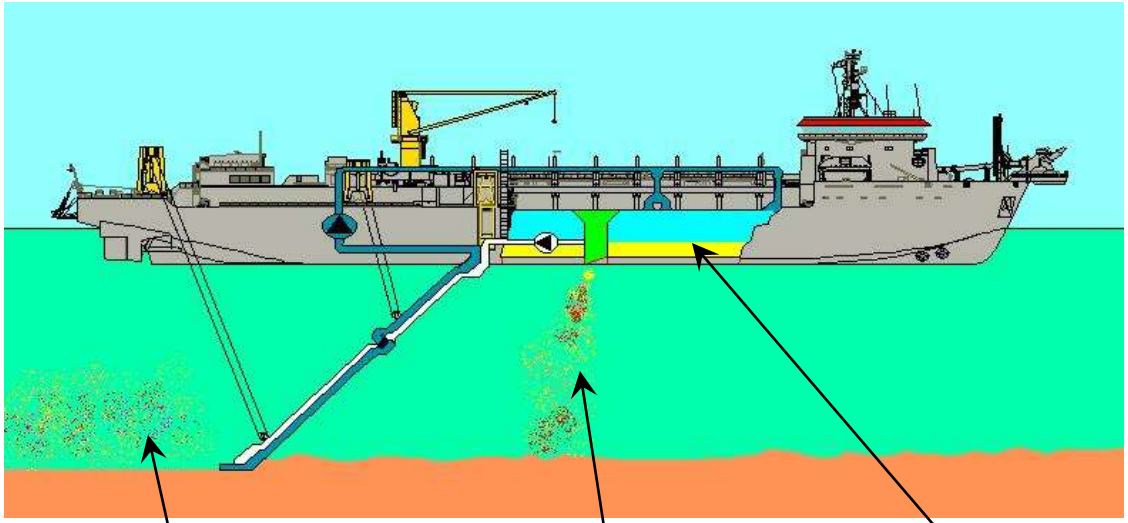

- plume generation while loading with <u>low turbidity valve</u>

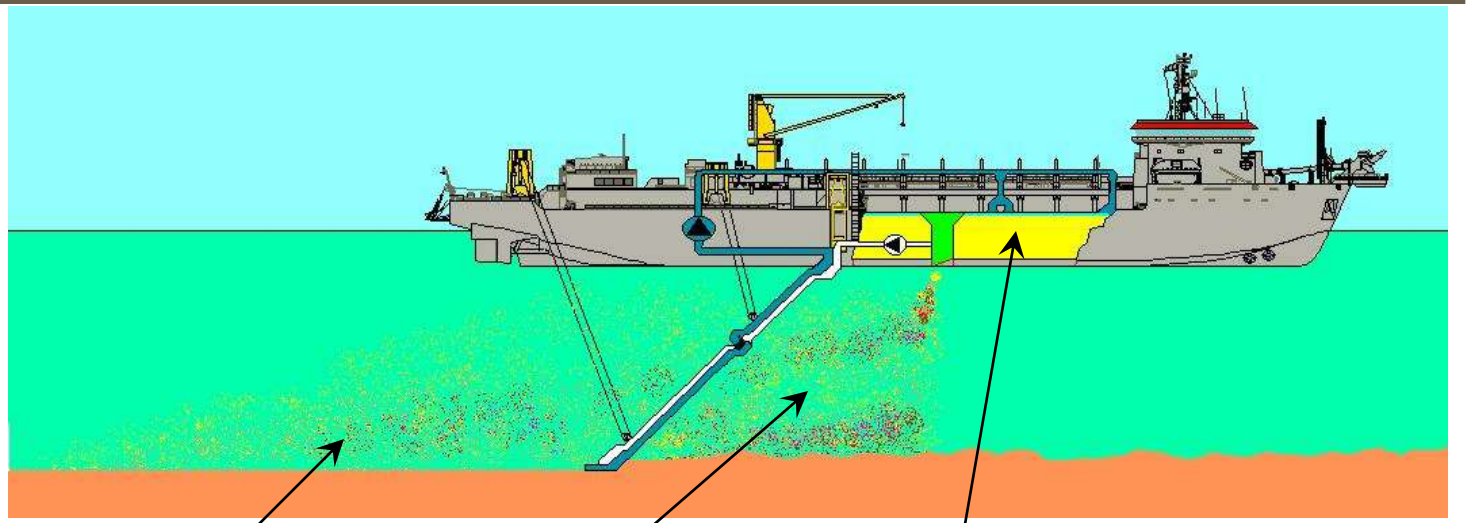

turbidity plume dredge head

turbidity plume overflow

continue loading

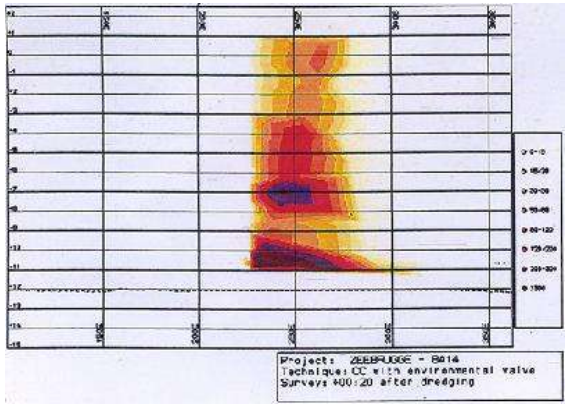

New parameters :
- density stream

- additional loading with ‘green pipe’

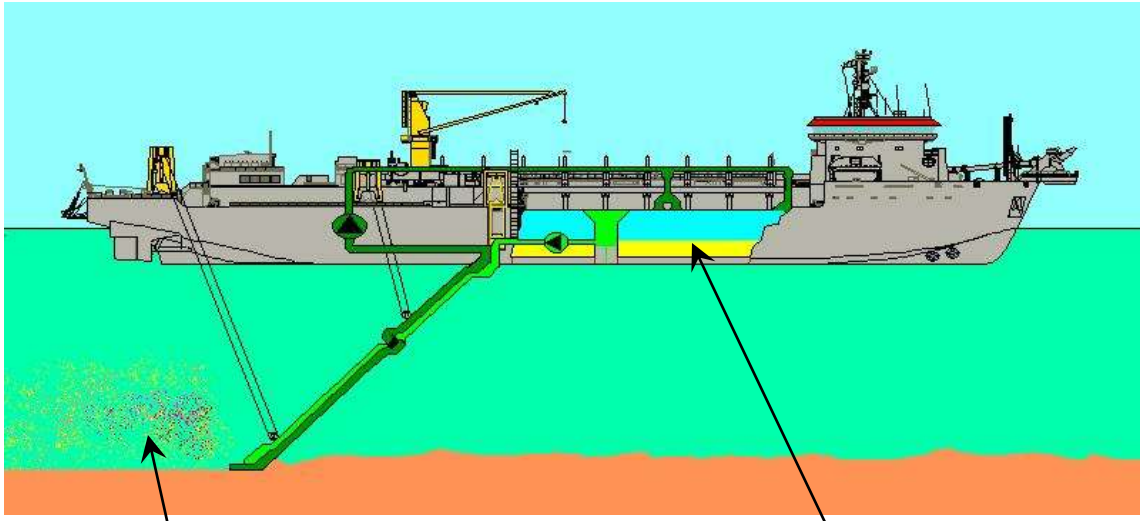

turbidity plume dredge head and ‘green pipe’

continue loading

- plume generation while loading with ‘green pipe’

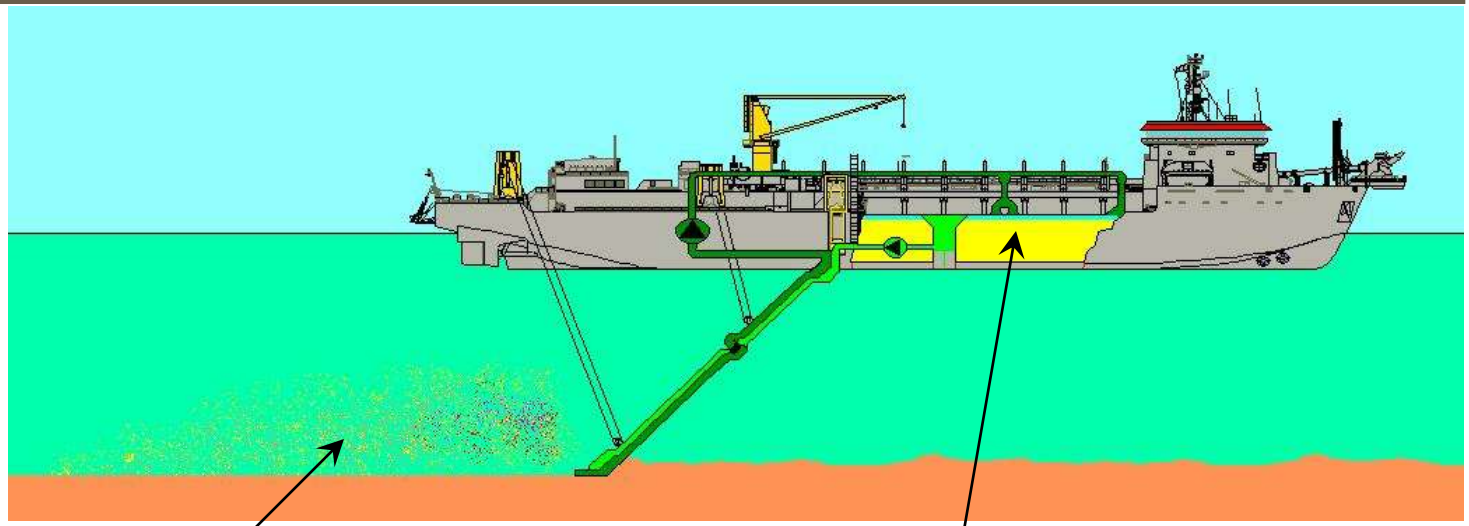

turbidity plume dredge head and ‘green pipe’

continue loading

New parameters :
- recirculation fluid

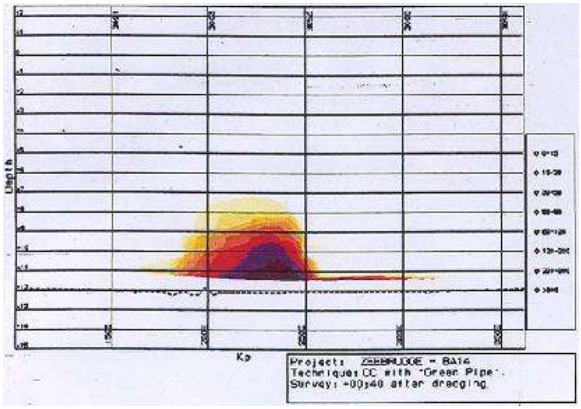

Comparison turbidity plume dispersion :

Standard overflow →

Low turbidity valve →

'Green pipe' →

No overflow →

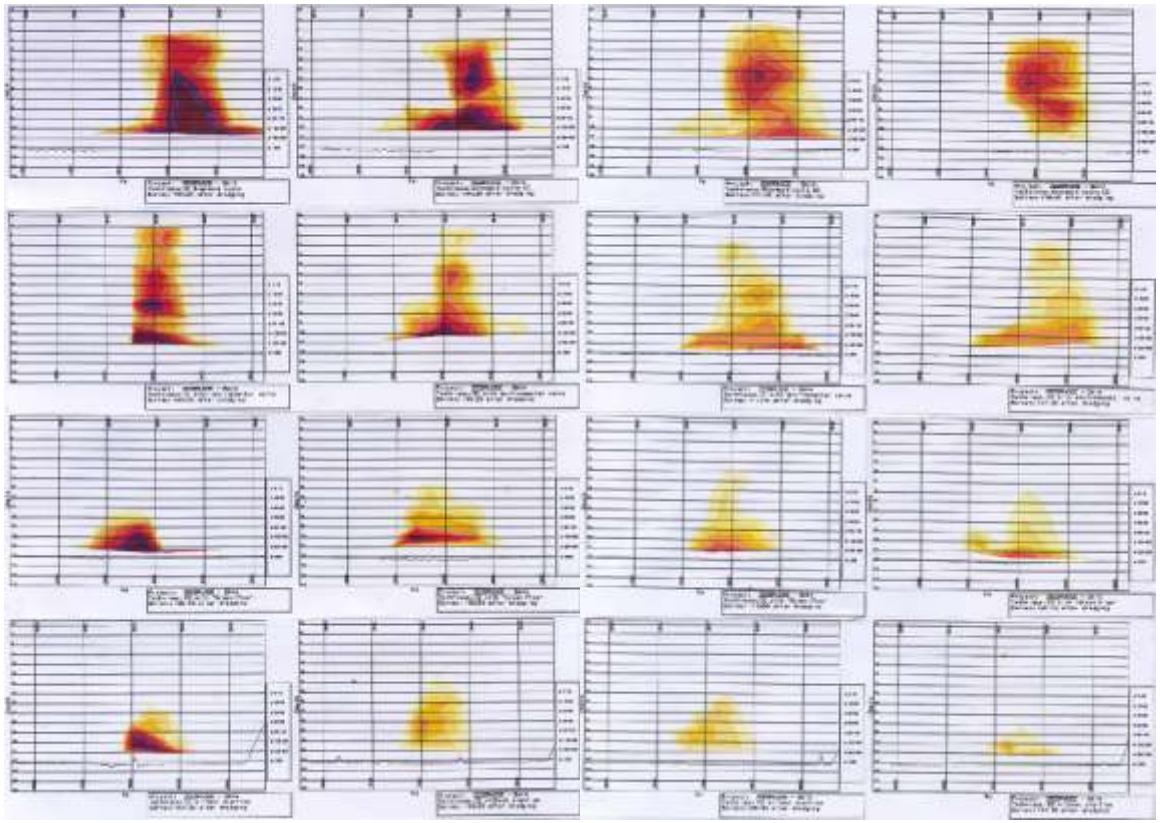

Elapsed time : 00:30 05:00 10:00 15:00 min

Conclusions :

- **Plume generation relative to the plume generated during the dredge cycle with standard overflow :**

  - low turbitiy valve : 41 %
  - ‘green pipe’ : 21 %
  - without overflow : 13 %

- **Application of alternative dredging techniques is not relevant if the additional turbidity generated during the dredging works is only a fraction of the background turbidity .**

Measuring Airquality in dredging zones

Watersamples in the dredging zone

Certificado | Sistemas de Gestión

INSTITUTO ARGENTINO DE NORMALIZACIÓN Y CERTIFICACIÓN

IRAM certifica que:

CORPORACIÓN LABORATORIOS AMBIENTALES DE LATINOAMÉRICA S.A.

Casella Piñero 354/358 - (1872) - Avellaneda - Pcia. de Buenos Aires

posee un Sistema de Gestión Ambiental que cumple con los requisitos de la norma:

IRAM-ISO 14001:2004

Cuyo alcance es:

Servicios analíticos ambientales, fisicoquímicos y ensayos microbiológicos (excepto San Pablo), muestreo de aguas superficiales, aguas subterráneas, aguas de consumo, efluentes líquidos, suelos, residuos, aire y efluentes gaseosos. Evaluación e interpretación de resultados para las unidades de negocio establecidas en Buenos Aires y San Juan (Argentina), Bahía y San Pablo (Brasil), Lima (Perú) y Quito (Ecuador).

Certificado de Registro Nº: 14000-173

Vigencia Desde: 2010-09-21 Hasta: 2013-09-21

SISTEMAS DE GESTIÓN

Este certificado es válido siempre que la organización mantenga en operación, en condiciones satisfactorias, su Sistema de Gestión Ambiental.

Dirección de Certificación

Comité General de Certificación

IQNet

Monitoring Sound pollution in Dredging zones

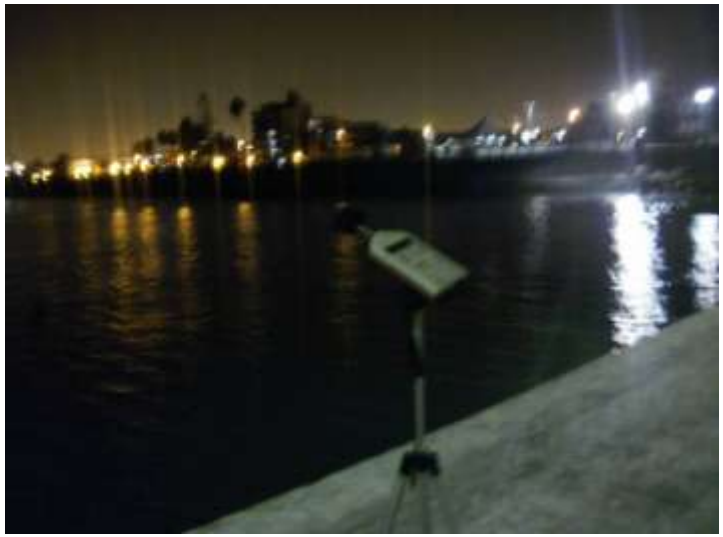

Environmental Sustainability – Waste Handling

Waste Handling

- Domestic Waste
- Dredging Waste

- Oily and Chemical Waste

DIRTY RAGS

CHEMICAL CANS

USED OIL FILTERS

Health & Safety Requirements

Oil Spill Prevention and Response

- Under every possible spill station (hose coupling, pump,…) a drip tray has to be placed.
- Oil Spill Equipment should be available where oil/fuel is handled.
- If oil is spilled by ship, P&I & has to be informed (Marine Emergencies Chart)). Quantity and type of product has to be mentioned.
- The use of dispersant IS NOT ALLOWED.
- CLEAN UP THE OIL SPILL IMMEDIATELY!!!

Environmental Sustainability

- Dumping on large distances from the coast, in approved dump areas

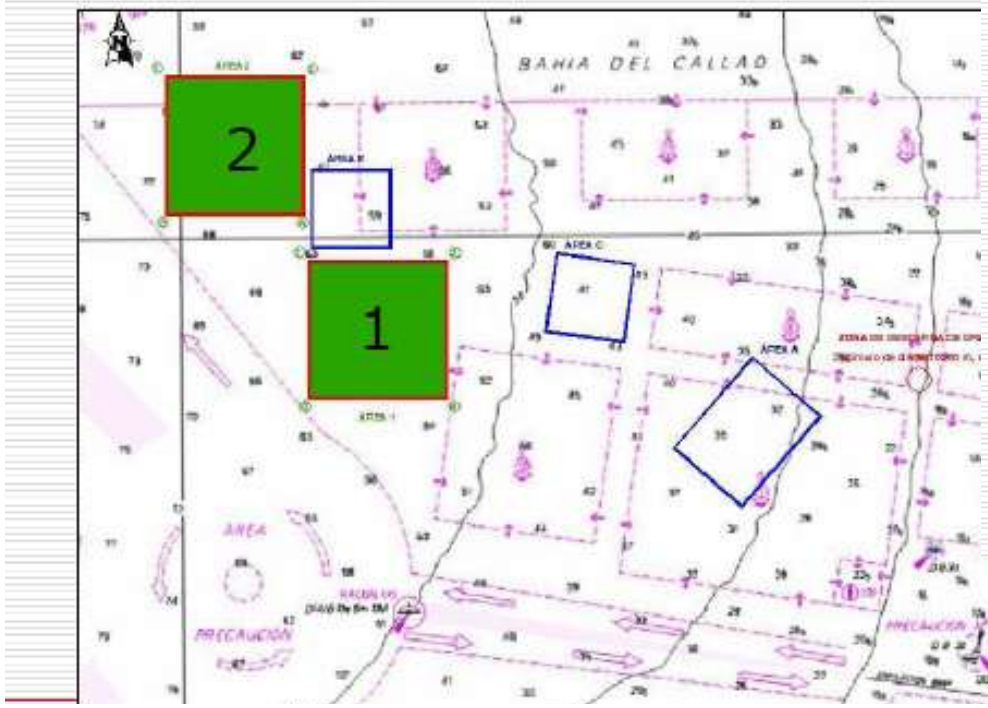

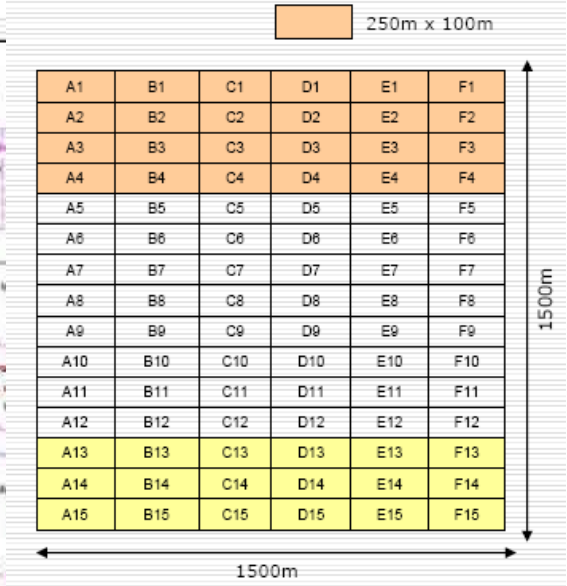

Distance to Area 1: 9.5km – Distance to Area 2: 12km

Obras Comunes – New Navigation Aids

Relocation of actual buoys. – Range lights improvement.

Installation of new buoys. - Relocation of breakwater beacons.

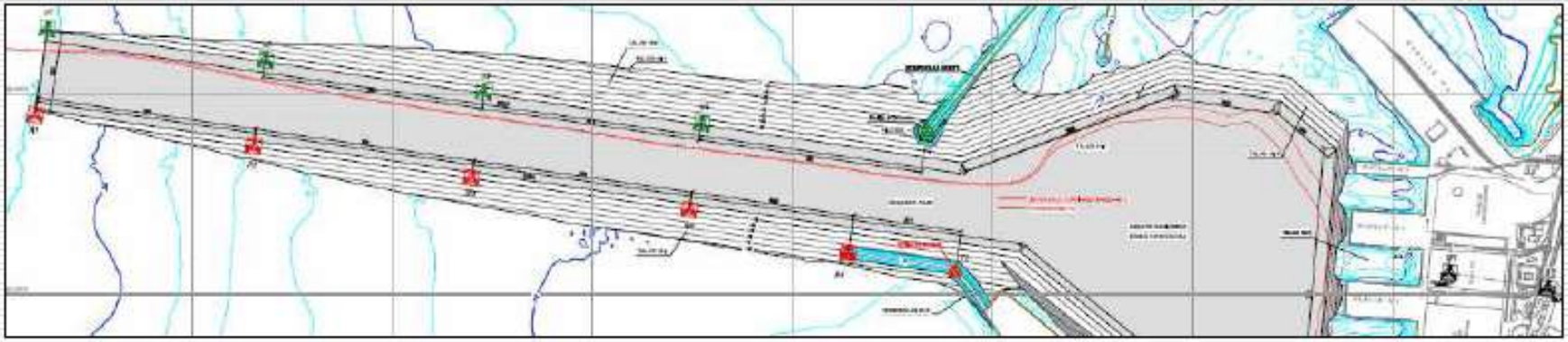

Jan De Nul GROUP

OFFICE JAN DE NUL N.V.

Tragel 60 I 9308 HOFSTADE-AALST I Belgium
T +32 53 73 17 11 I **F** +32 53 78 17 60
info@jandenul.com
www.jandenul.com